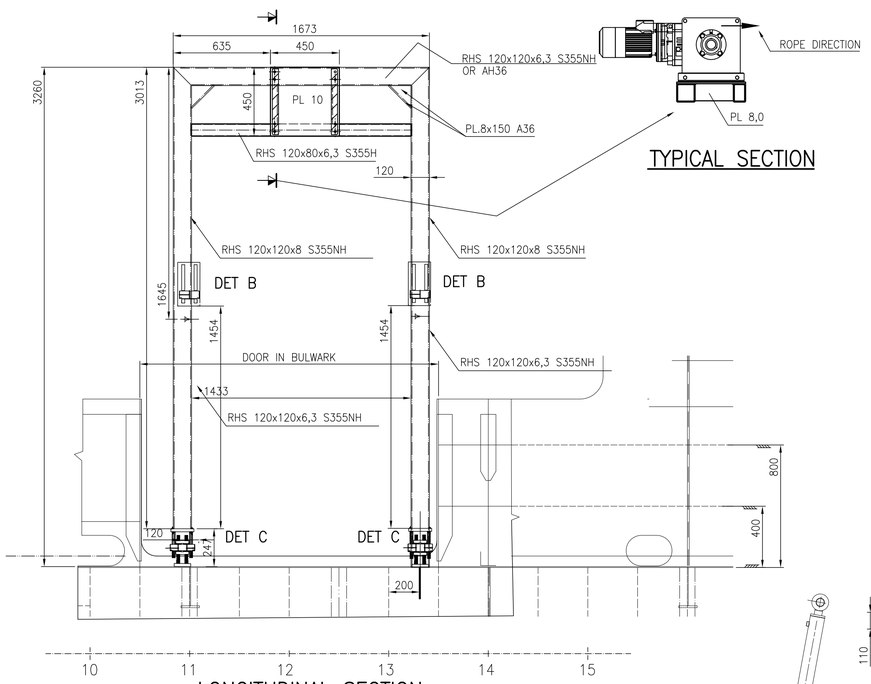

TYPICAL SECTION

LONGITUDINAL SECTION
LOOKING TO P

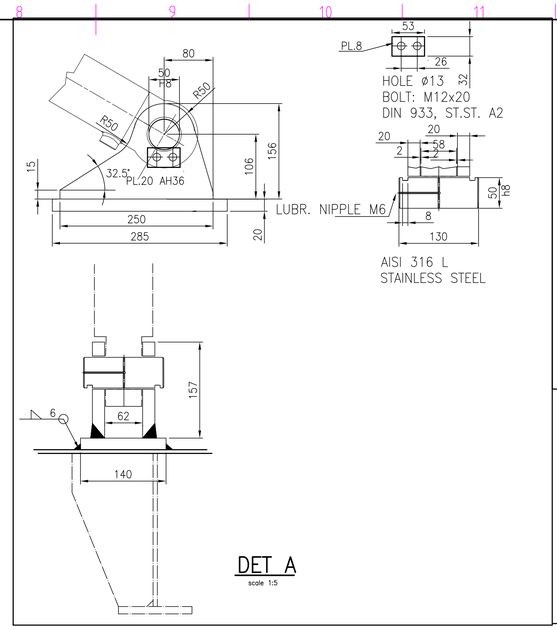

DET A
scale 1:5

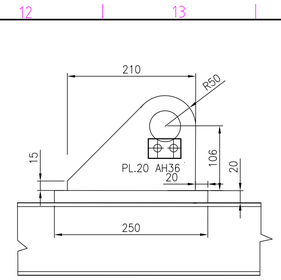

DET B
scale 1:5

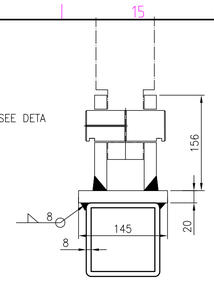

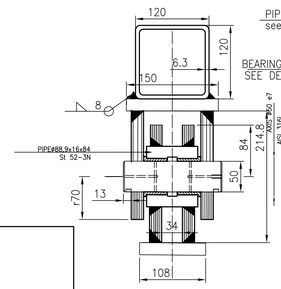

DET C
scale 1:4

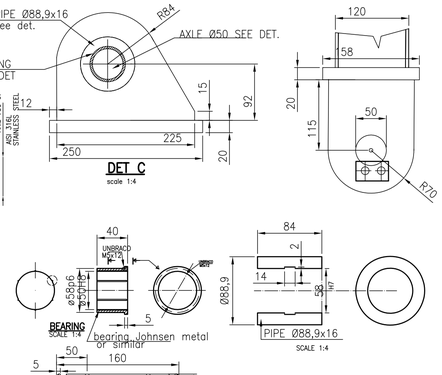

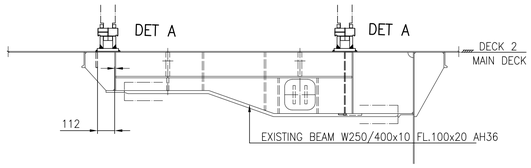

SECTION A–A

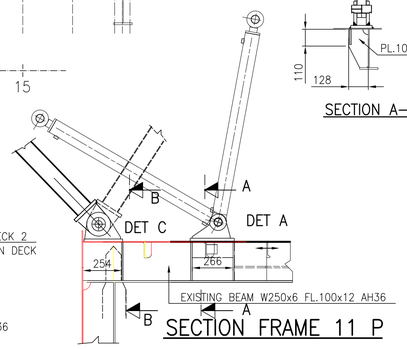

SECTION FRAME 11 P

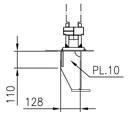

SECTION A–A

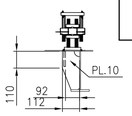

SECTION B–B

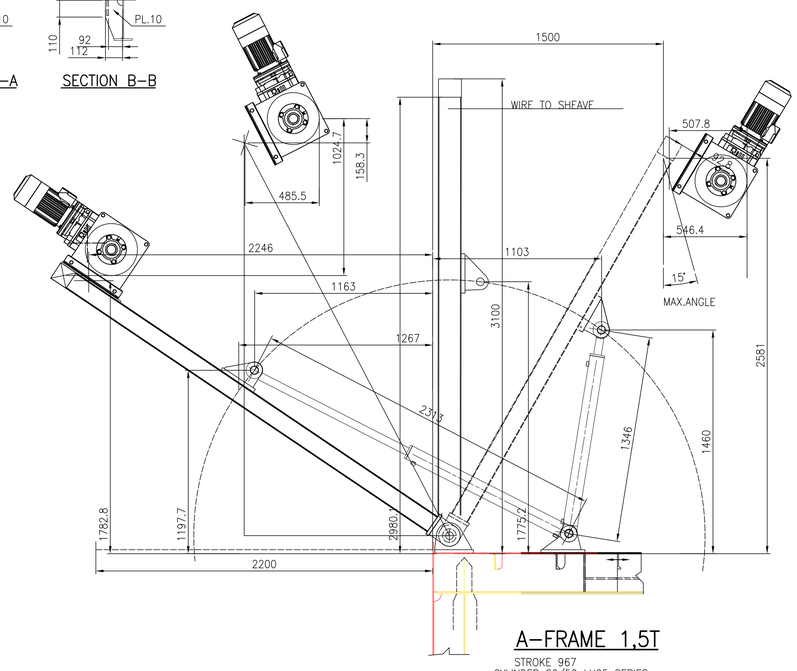

A–FRAME 1,5T

STROKE 967
CYLINDER 80/50 LH25 SERIES
CYLINDERFORCE 86KN AT INNER POSITION (compression)
CYLINDERFORCE 32KN AT OUTER POSITION (tension)

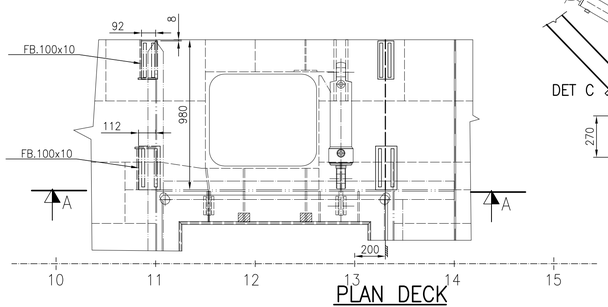

PLAN DECK

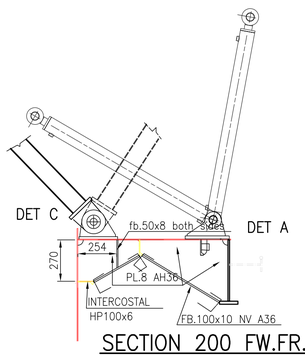

SECTION 200 FW.FR.13

WEIGHT : 200KG

MATERIAL:

AH 36 IF NOTHING ELSE IS SHOWN

WELDING:

FULL PENETRATION WELD OF A–FRAME
20MM PLATE TO DOUBLING PLATE : FULL PENETRATION WELD
DOUBLING PLATE TO DECK ◺ 6,0

REF.DRAWINGS:

62–307–101 DOORS IN SHIP SIDE
62–300–101 EXTERNAL ARR. ON DECK 2 AND 3
62–304–101 HYDRAULIC FLUSH HATCHES
62–U01–101 UNIT 1

TECHNICAL INFORMATION:

REPORT NO 62–152–902

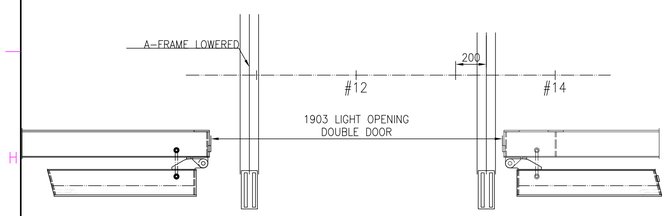

DOORS IN OPENED CONDITION

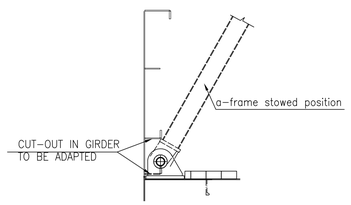

TYPICAL SECTION
PS–SHOWN, SB–MIRROR

Winch data

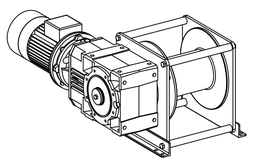

3D view of winch

WINCH	ISO–TEM CLASS	T3–L3–M4
	OPERATING TEMP.	0 to +40
	DUTY	LIFTING
	RATED CAPACITY, ON THE TOP LAYER	1205 KG
	RATED CAPACITY, ON THE 1ST LAYER	1600 KG
	RATED SPEED, ON THE 1ST LAYER	7 m/min
	MAX. SPEED, ON THE TOP LAYER	10 m/min
	MASS WINCH EXCL. CABLE	≈ 185KG
CABLE REQ.	Ø	11 mm
	MAXIMUM NUMBER OF LAYERS	5
	LENGTH	74 m
	MINIMUM BRAKE LOAD (M.B.L.)	84,4 kN
DRUM	BARRED	168 mm
	BARREL	350 mm
	FLANGED	350 mm
	GROOVE NONE	
	PITCH	mm
	RADIUS	mm
	WIDTH	mm
	BRAKE FACTOR	× W.L.L.
MOTOR	TYPE ELECTRICAL BRAKE MOTOR	
	PROTECTION CLASS	IP 54
	POWER	2,2 kW, S1
	VOLTAGE	400 VAC
	FREQUENCY	50 Hz
	BRAKE FACTOR	1,5 × W.L.L.
GEARBOX	TYPE HELICAL GEARBOX	
	GEAR HIGH QUALITY	
EXTRA(S)		

This drawing is the property of MULTI MARITIME A/S. It must not be copied or divulged to any unauthorized third party without written authorization from MULTI MARITIME A/S. The receipt of the drawing implies that the conditions as mentioned herein are accepted.

MULTI MARITIME A/S
N–6801 FØRDE

REV.NO.	REVISION	DATE	APPR
C	Winch with foundation added.	16.07.14	HJB
B	A–frame width changed	28.05.14	HJB
A	Issued for approval / coments	26.05.14	HJB

Approved: OWNER / YARD / CLASSIFICATION / MARITIME AUTH. — Date

CLIENT: WESTERN BALTIJA SHIPBUILDING
CLIENT REFERENCE
TITLE: 1,5T A–FRAME
SCALE: 1.20
DRAWN JKL 26.05.14
CK'D HJB 26.05.14
APPR.

MULTI MARITIME AS
P.O.Box 90, N–6801 FØRDE
Phone 47 57823000
Telefax 47 57828451
E–mail: firmapost@multi–maritime.no

PROJECT NO. 297/2 | YARD NO. 62 | SFI 263
FILE NAME / DRAWING NO. 62-263-159 | REV.NO. C

ISO-A1

H:\297-2 WSY yno 62 - MM40MRV till KU\Drawings\62-263-159-C.dwg, 16.07.14 17:09:34, HB, Adobe PDF.pc3, A1, 1:20